CAR SHOW DISPLAYS
w/ RETRACTABLE STANCHIONS

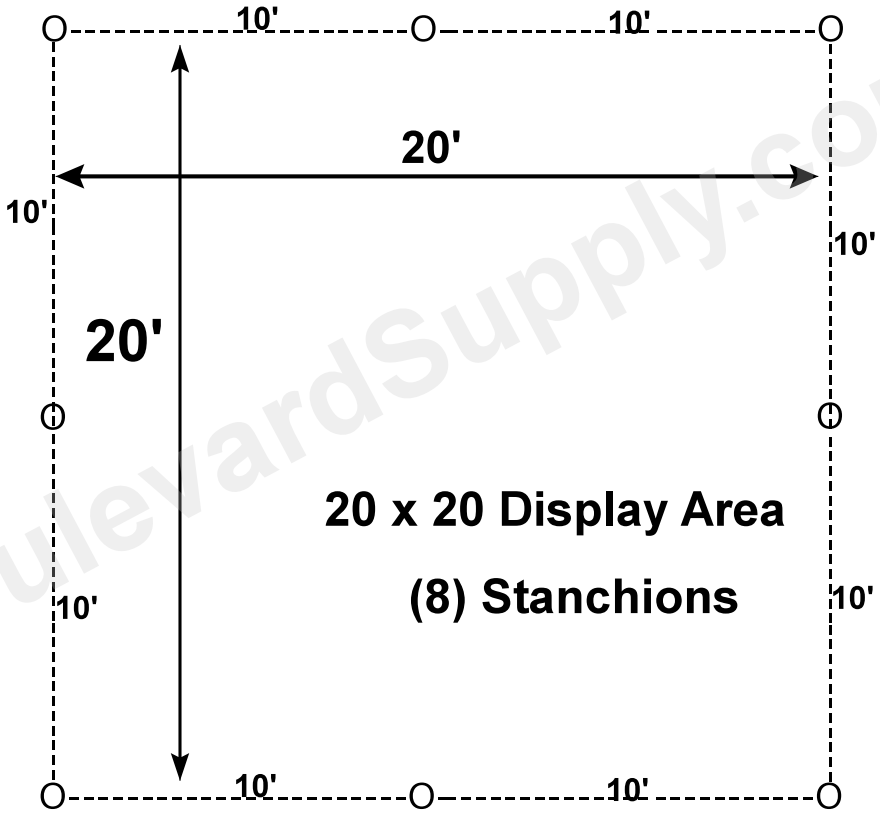

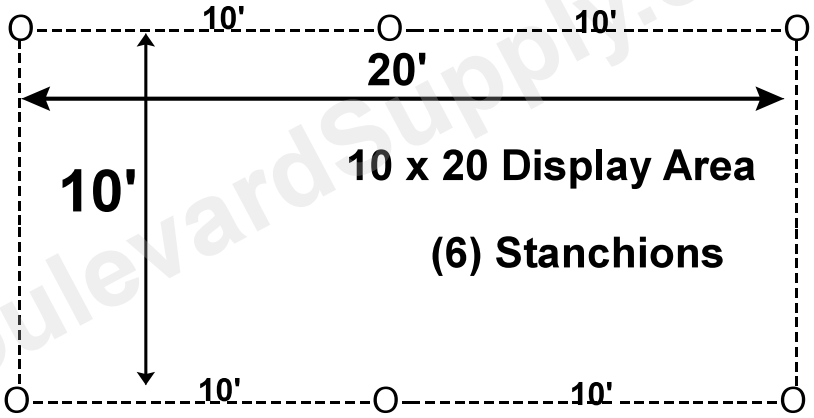

BoulevardSupply.com
BoulevardSupply.com

Boulevard Supply LLC
www.boulevardsupply.com
702-706-7047